LF (70/455 kHz)

# BIS C-122-04/L
# Order Code: BIS0011

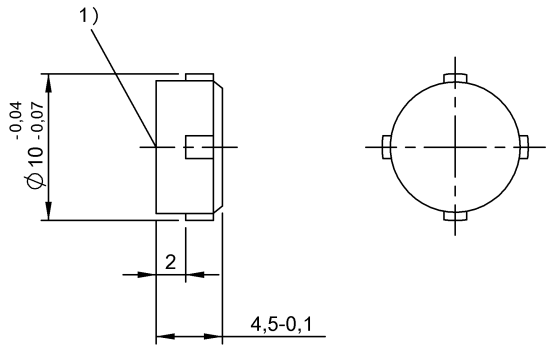


1) Sensing surface

## Basic features

| | |
|---|---|
| Antenna type | round |
| Approval/Conformity | CE<br>UKCA<br>cULus<br>WEEE |
| EN 55011 | Size 1, Cl. A |
| Principle of operation | Data carrier |
| Radio license | Europe (CE)<br>United Kingdom (UKCA) |

## Electrical data

| | |
|---|---|
| Memory organization | 32 × 8 bits |
| Programming cycles | up to 30 °C: 1,000,000<br>up to 70 °C: 500,000 |
| Programming time | for 1x8 bits: 0.3s<br>for 32x8 bits: 0.6s |
| Read cycles | Unlimited |
| Read time | for 32x8 bits: 0.19 s |

## Environmental conditions

| | |
|---|---|
| Ambient temperature | 0...70 °C |
| Continuous shock load | yes |
| EN 60068-2-27, Shock | yes |
| EN 60068-2-32 Free fall | yes |
| EN 60068-2-6, Vibration | yes |
| IP rating | IP68 |
| Storage temperature | -30...85 °C |

## Functional Characteristics

| | |
|---|---|
| Memory type | EEPROM |
| User data, read/write | 511 Byte |

## Material

| | |
|---|---|
| Housing material | Epoxy-resin/fiberglass |

## Mechanical data

| | |
|---|---|
| Application weight | 0.70 g |
| Dimension | Ø 10 x 4.5 mm |
| Installation | metal-free (clear zone)<br>on metal<br>flush in metal |

## Remarks

Only together with converter BIS C-901 or BIS C-6xx and the appropriate read/write head.
Values are under rated conditions unless otherwise specified.
For installation requirements see corresponding read/write head.
Time specification includes data check.
IP68 tested according to BWN Pr 36
On the last page only 31x8 bits are usable.
For installation in hole Ø10 H11 (glue)